MARCO®
FLUID TECH

SELF-PRIMING ELECTRIC PUMP FOR TRANSFERRING VARIOUS LIQUIDS

INSTRUCTIONS FOR USE

164 322 12-US - UP12-LO 12V
164 322 13-US - UP12-LO 24V

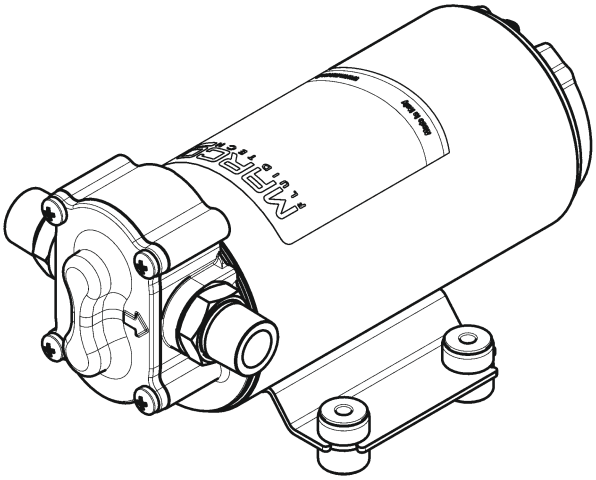

CE

20/10/21 Rev.0

© MARCO S.p.A.

PRODUCT DESCRIPTION

Self-priming electric particularly designed for the transfer of lubricating oils or viscous liquids. The pumping elements are made up of bronze gears which can possibly even run dry for brief periods.

TECHNICAL DETAILS

Tab.1 EN

CODE	TYPE	VOLT	FUSE		FLOW RATE (*)			WEIGHT		WIRE SIZE (**)	
164 322 12-US	UP12-LO	12	A	25	gpm	Ø16	5,8	lb	9,9	AWG	12
164 322 13-US		24		15							
(*) T46 oil / (**) Length up to 2 m											
IP 67 Protection											

APPLICATIONS

- Transferring of lubrificating oils and viscous liquids;
- transferring of antifreezing;
- draining of engine pumps.

There are numerous fields of applications for the pump, however only exclusively with the allowed liquids mentioned:

FLUIDS ALLOWED / NOT ALLOWED

Tab.2 EN

LIQUIDS		***DANGERS***				
WARRANTY EXPIRES IF MAX FLUID TEMPERATURE IS EXCEEDED		FIRE / EXPLOSION	MOTOR OVERHEATING	PUMP CORROSION	INJURY TO PERSONNEL	DAMAGE TO SEALS
OK	WATER					
	DIESEL FUEL (*)					
	OIL (max 120 °C- 248 °F)					
NO	PETROL (GASOLINE)	●				
	FLAMMABLE LIQUIDS with PM< 38 °C-100 °F	●				
	LIQUIDS WITH VISCOSITY > 100 cSt		●			
	CORROSIVE CHEMICAL PRODUCTS			●	●	
	SOLVENTS	●				●
(*) Minimum flashpoint (PM): 38 °C-100 °F						
ISO 8846 Compliant Device						

© MARCO S.p.A.

AMBIENT CONDITIONS

TEMPERATURE: min.-10°C/14°F - max.60°C/140°F **RELATIVE HUMIDITY:** max. 90 %

⚠ **WARNING:** the above indicated temperature ranges are applicable to all components of the pump and these limits must be respected in order to avoid any possible damage or malfunctioning.

OPERATING CYCLE

The pump can operate on a continuous cycle with the following conditions:

- pressures not exceeding 50% of the maximum pressure indicated in the technical data
- temperature of the motor below 60/70 °C - 140/158 °F

It is possible to operate at higher pressures/ampere draw if On/Off cycles are used. This will allow the motor to cool down to the indicated temperatures.
Long pipelines and / or reduced diameters, bottlenecks and dispensing guns, affect the operating pressure (which is not automatically limited): in these cases, check that the pressure and the electrical draw do not exceed the values of the attached diagrams.

TRANSPORTATION AND HANDLING

Due to limited weight and dimensions the pump does not require the use of any special handling or lifting equipment. When handling manually, normal personal protective gear should be worn (safety shoes with toe piece, etc.). The pump is carefully packed prior to shipment. Upon receiving, the packaging should be inspected for damages and the pump stored in a dry area at a temperature between -30°C /-22°F and 70°C/158°F.

INSTALLATION

It is recommended that the use of the pump be according to normative safety standards and also as per the precautions listed below.

PRELIMINARY CHECKS

Check that there has been no damage to the pump during transportation or storage. Both inlet and outlet ports should be carefully cleaned removing possible dust or residual packaging material. Verify that the available electrical power supply corresponds to the specification requirements.

POSITIONING

The pump can be mounted in any position. Fix the pump utilizing suitable diameter screws corresponding to the holes.

© MARCO S.p.A.

To ensure the correct directional flow of the fluid as indicated by the arrow on the top plate, it is necessary to connect the positive pole (+) of the battery supply to the red wire on the motor end-cap and the negative pole (-) to the black wire. Electrical connections must be made using adequate terminal blocks and connectors ensuring a tight fitment of the electrical cables. Bad wiring can cause power losses and/or overheating of the cabling itself.

⚠ **WARNING:** it is the responsibility of the installation technician to ensure a correctly designed circuit installation fitted according to regulations. Environmental risks must be taken into account with the installation.

TUBING CONNECTIONS

- Prior to making any tube/hose connections, check that the inlet ports have no end caps;
- Do not position the pump at a excessive height with respect to the minimum level of the fluid to be transferred. Damage may occur if this height is exceeded as the pump may not draw fluid. Make sure that the outlet tube is empty and without chokes;
- Avoid choking the inlet or outlet tubes so that efficiency is optimized.
- The use of an inlet filter is recommended especially with fluids containing impurities (mesh ASTM no. 35). In this case frequent cleaning and maintenance of the filter is advisable. The standard filter withstands a maximum positive pressure of 0.5 bar.
- Utilize tubes and connection pieces that are resistant to the fluid types handled and avoid any possible environmental dispersion.

ELECTRICAL CONNECTION

⚠ **WARNING: DUE TO THE EMI FILTER THE PUMP IS NOT SUITABLE FOR SWITCHING APPLICATIONS (PWM DRIVER)**

The electrical installation of the pump must include a protection fuse which is suitably rated as indicated on the motor label.

WARRANTY EXPIRES IF NO FUSE IS UTILIZED

Always mount the anti vibration rubber fittings supplied with the pump kit. Their usage ensures a consistent reduction in noise and vibration levels. Electrical cabling size should depend on the distance between pump and battery/power supply (see Tab.1 EN). The use of undersized cabling can cause overheating of the electrical wiring and subsequent fire hazard. There will also be a voltage drop at the motor terminals with a consequent reduction in efficiency. The flow rate value indicated on the motor label is obtained with internal tube diameter indicated on Tab.1 EN. Tubes with inferior diameters will cause an increase in current with potential risk of motor overheating.

© MARCO S.p.A.

TROUBLESHOOTING

CHECK POINTS IF THE PUMP HAS STOPPED OR WILL NOT START

- Check the effectiveness of the battery power supply (voltage activity);
- Check if the fuse has blown;
- Check for any foreign matter present in the pump body. To do this, disconnect the power supply and unscrew the four fixing screws, remove the front cover plate and inspect the chamber. Replace the cover plate in the same initial position after inspection;
- Avoid running the pump dry for more than a few minutes. Pumps found defective that have run dry in the absence of fluid are not covered by warranty;
- The average life span of the motor commutator brushes is approximately 2500 hours under normal operating conditions. Stoppages are possible due to brush wear and tear after such a time period.

WHY THE PUMP WILL NOT PRIME ITSELF?

- The pump is fitted at an excessive height above the fluid level
- The pump has run dry for too long a period
- Long periods of inactivity. In this case it is advisable to add liquid directly into the chamber before start-up
- Air leak at the suction pipe due to the following reasons, possible cuts in the pipe, inadequate hose clamps, malfunctioning of the filter due to defective/worn seals or filter clogged
- Air leak at the front plate cover due to the following reasons, loose fixing screws, poor effectiveness of the seal
- Faulty electrical cable connections
- Presence of obstructions or restrictions in the suction or delivery pipes or the use of special devices (eg. automatic spray pistol or Aquastop)
- Presence of liquid loops in the outlet tube
- Dirty bypass valve (VP45 series)

GOOD PRACTICES ENSURING A WELL FUNCTIONING PUMP

If it is expected that the pump will not be used for a period of at least 30 days, especially in the case of usage with water, it is advisable to run fresh water through it and to then loosen the front plate screws. Upon re-use, run the pump briefly (a few seconds) and tighten the screws again. Check under conditions of maximum operating pressure that the motor current value is within the motor label specifications.

© MARCO S.p.A.

NORMAL MAINTENANCE

- Check frequently and keep the inlet filter clean.
- Check every month the chamber and keep clean from any foreign matter.
- Check every month that electrical wiring is in good condition.
- Replace the rubber impeller every season or every 500 hours (for UP1 series).

INDICATORS THAT THE PUMP IS FUNCTIONING CORRECTLY

- Temperature of body and motor frame is within 60°C and 70°C (140 °F - 158 °F);
- Regular flow and constant noise levels;
- Amp-draw within the limits indicated in the diagrams.

TO OPEN THE PUMP

- It is recommended that a specialized service technician be consulted for any repair work or the replacement of worn out internal components, exclusively with original spare parts; during the warranty period, only by authorized Marco S.p.A. personnel, failing which the warranty will expire.

ENVIRONMENTAL DISPOSAL

It is the responsibility of the owner to dispose of this product by means of the specific refuse collection structures indicated by the government or the local governing authorities.

PACKAGING ENVIRONMENTAL DISPOSAL

The user is invited to effect a proper waste separation, in order to facilitate the recycling of the materials of which the packing is composed.

WARRANTY

1) The Warranty period is 2 years from date of purchase on production of the appropriate sales invoice.
2) Should the original sales invoice not be available, then the 2 year warranty period will be valid from production date.
3) The Warranty becomes null and void in the case of incorrect utilization or disregard of the instructions contained herein.
4) The Warranty only covers original production defects.
5) The Warranty does not cover any related installation costs involved.
6) Transport costs are refundable only in the case where warranty has been duly accepted by Marco Spa and they will be limited to the actual shipment costs between Marco Spa warehouse and the client's delivery address.
7) No credit notes or replacement items will be issued prior to the receipt and proper testing of any Marco goods that are deemed faulty.

© MARCO S.p.A.

EXPLODED VIEW

Pos.	Q.tà	Descrizione	Description	Ricambio Spare Part
1	1	CORPO POMPA	PUMP BODY	
2	2	TIRANTE	ROD	
3	1	CARCASSA	PUMP FRAME	
4	1	ANELLO DI TENUTA	RUBBER LIP SEAL	X
5	1	RONDELLA	WASHER	
6	1	CUSCINETTO	BALL BEARING	
7	1	INDOTTO	ARMATURE	
8	2	O-RING	O-RING	X
9	1	CALOTTA	BRUSH HOLDER	
10	1	CUSCINETTO	BALL BEARING	
11	1	ANELLO ONDULATO	COMPENSATION SPRING	
12	2	O-RING	O-RING	
13	2	RONDELLA	WASHER	
14	2	DADO	NUT	
15	1	INGRANAGGIO FOLLE	IDLE GEAR	X
16	1	LINGUETTA	KEY	
17	1	INGRANAGGIO TRAINANTE	DRIVING GEAR	
18	1	O-RING	O-RING	
19	1	PIATTELLO	TOP PLATE	
20	4	VITE	SCREW	
21	2	NIPPLO	NIPPLE	X
22	2	O-RING	O-RING	
23	4	ANTIVIBRANTE	ANTIVIBRATION MOUNT	X
24	4	INSERTO ANTIVIBRANTE	ANTIVIBRATION INSERT	

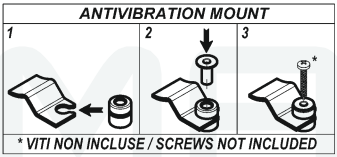

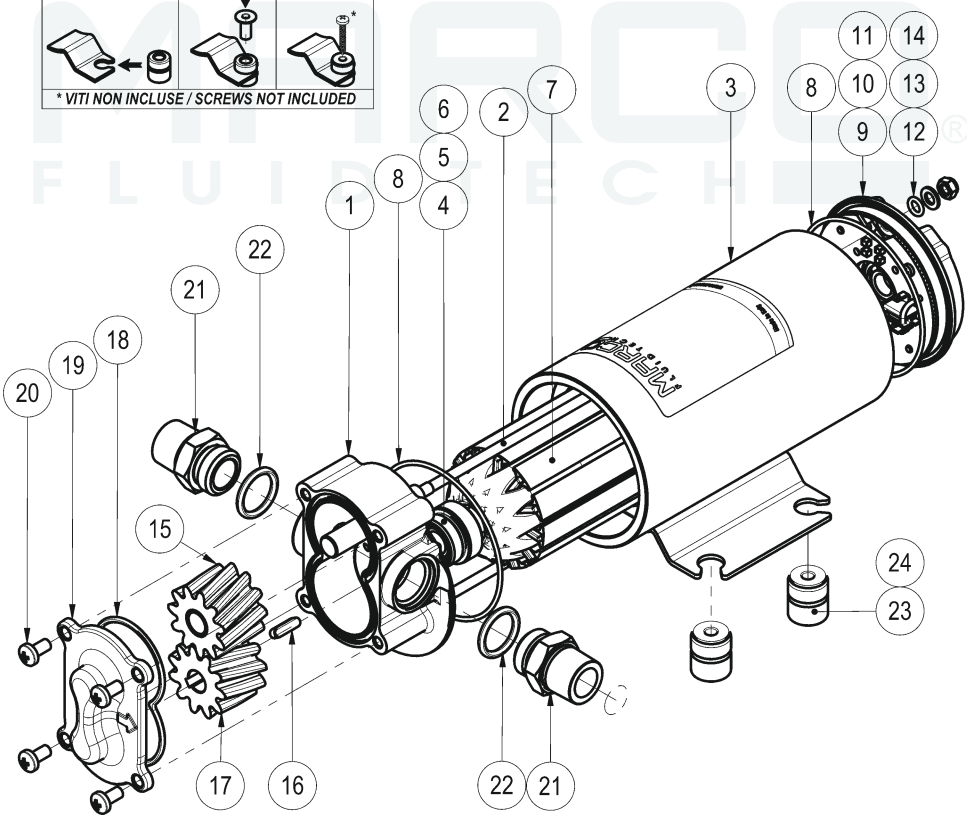

© MARCO S.p.A.

DIMENSIONS

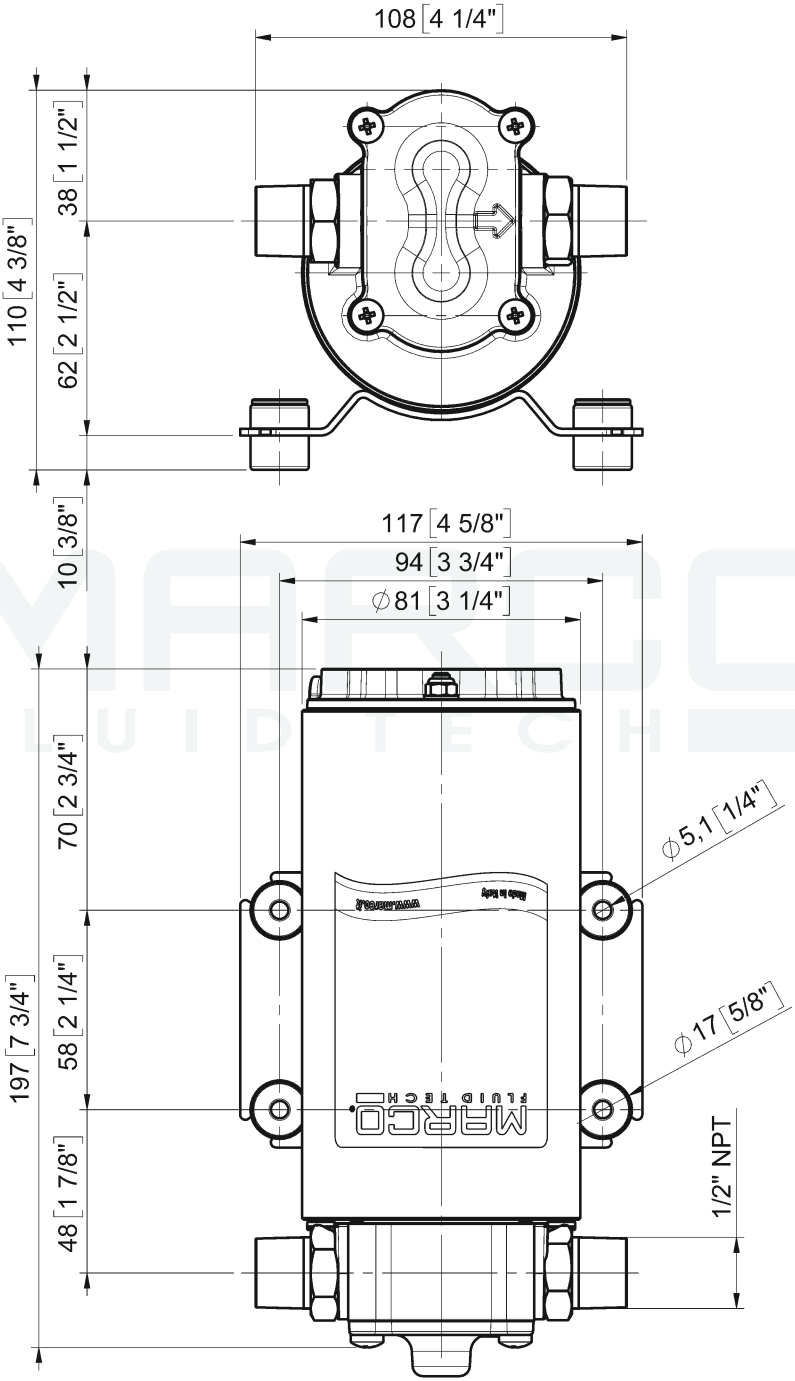

© MARCO S.p.A.

DIAGRAMS

FLOW RATES DIAGRAM (water)

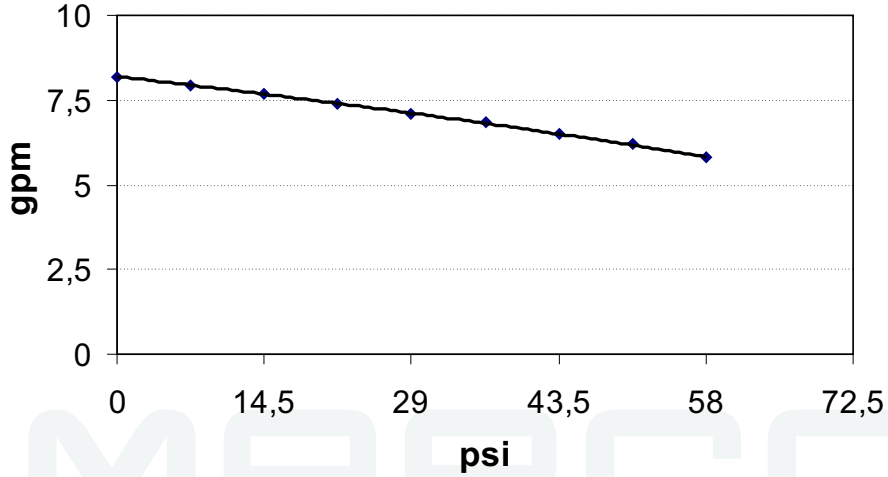

AMPERE-DRAW DIAGRAM (water)

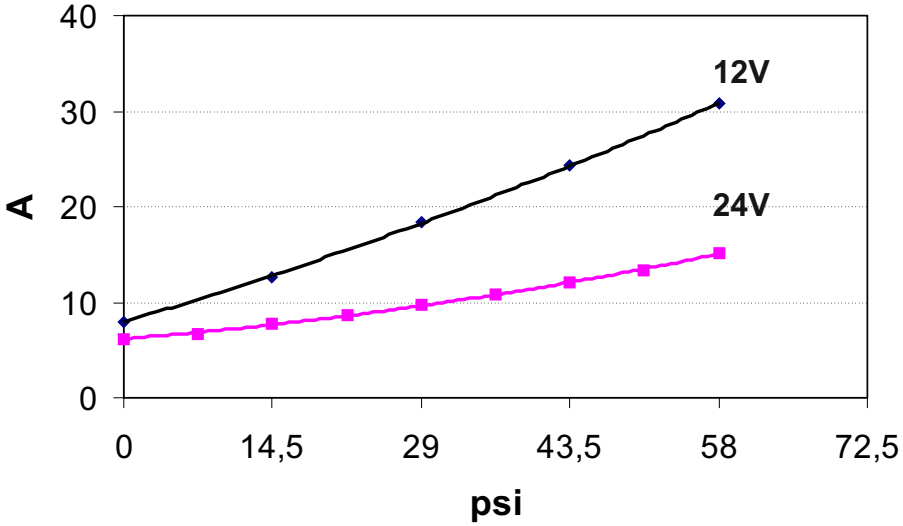

© MARCO S.p.A.

DIAGRAMS

FLOW RATE DIAGRAM (T46 oil)

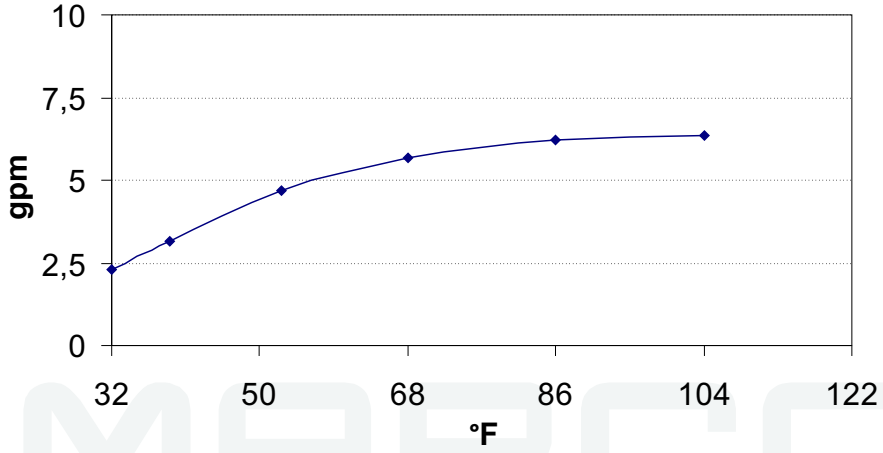

AMPERE-DRAW DIAGRAM (T46 oil)

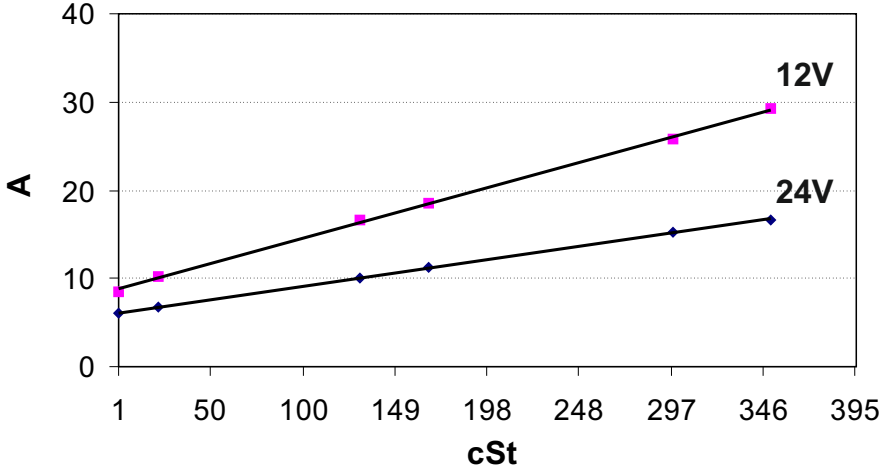

© MARCO S.p.A.

DIAGRAMS

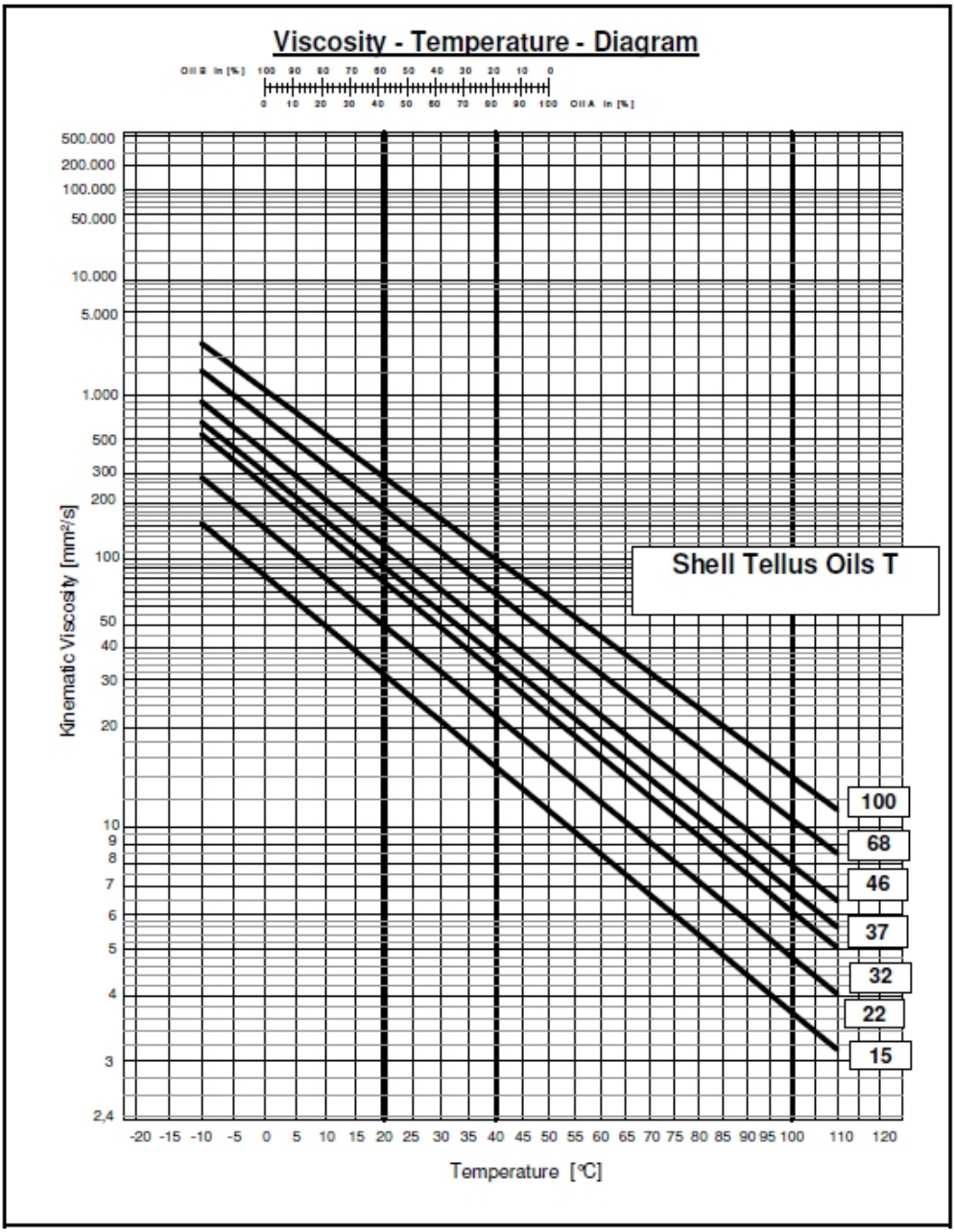

© MARCO S.p.A.

E.C. DECLARATION OF CONFORMITY

We confirm that the product:

164 322 12-US - UP12-LO 12V Gear Pump
164 322 13-US - UP12-LO 24V Gear Pump

is in conformity with the Directive 2014/30/EU (ex. 2004/108/EC) relating to electromagnetic compatibility and with the Directive 2006/42/EC relating to the machines.

This declaration is valid for all products which are produced in accordance with the technical documentation which is a part of this declaration. For verification of conformity with regard to the Electromagnetic Compatibility the following standards are applied:

EN 55014-1	Electromagnetic compatibility. Requirements for household appliances, electric tools, and similar apparatus. Part 1: Emission.

This declaration is given under the sole responsibility of:

MARCO S.P.A.
Via Mameli 10 - 25014 Castenedolo - Brescia - Italy
Tel. 030/2134.1 Fax 030/2134.300

© MARCO S.p.A.

NOTES

MARCO
FLUID TECH

© MARCO S.p.A.

Property of MARCO S.p.A reproduction prohibited. All rights reserved.
For further information visit our web site - www.marco.it
Marco S.p.A Via Mameli 10 - 25014 Castenedolo (Brescia) – Italy
tel. +39 030 2134.1 / Fax +39 030 2134.300