EMH-MS Electronic whistle + mike + siren

Quick Overview

Waterproof electronic whistle complete with loudspeaker, AISI 316 stainless steel bracket and electronic unit with microphone.
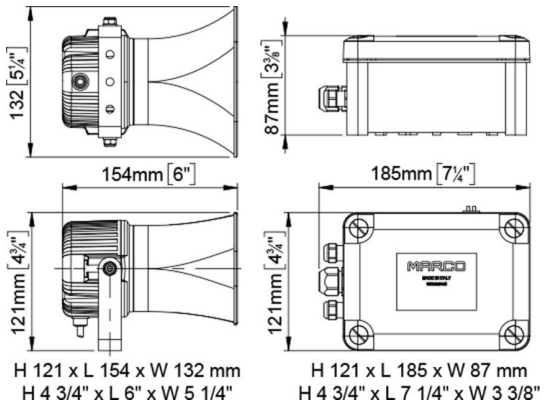
Part n.	Name	Voltage (V)	Consumption (A)	Hz	dB (1/3 oct) (1m)	IP Protection	Dimensions (in)
13600212	EMH-MS	12	1,5	800	112	66	6.1x4.8x5.2
13600213	EMH-MS	24	1	800	112	66	6.1x4.8x5.2